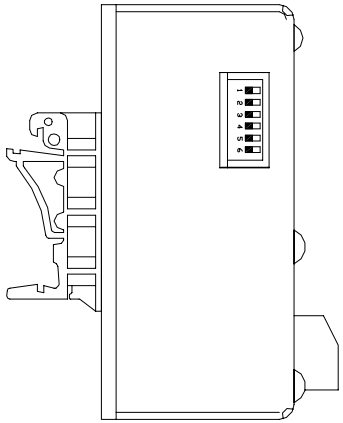

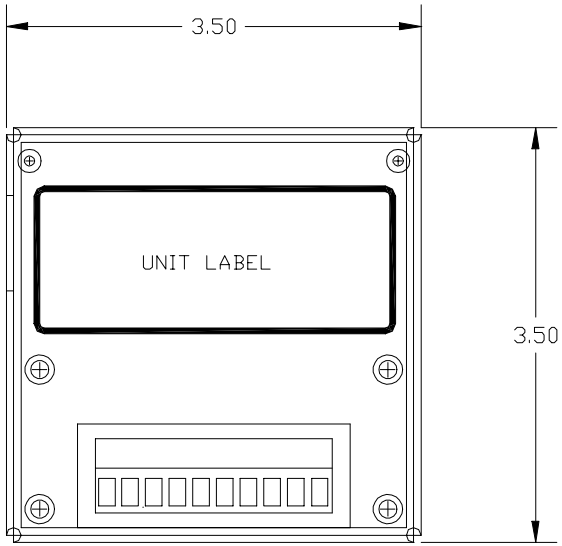

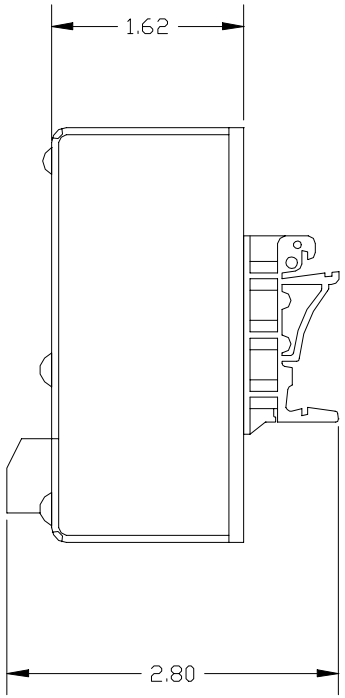

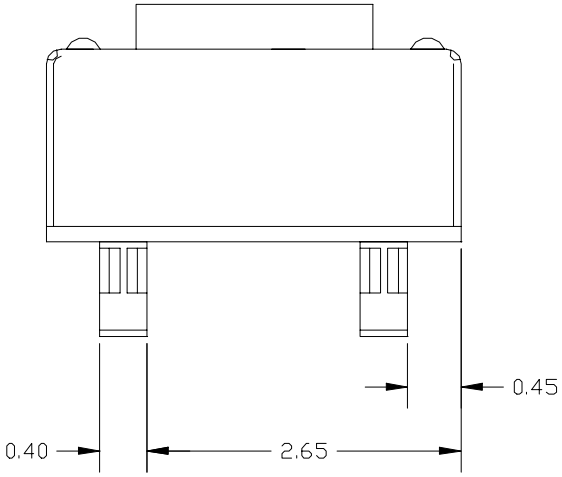

LET	DESCRIPTION	DATE	BY
A	P/N PREFIX WAS EP ECR#10972	11/19/98	DEW

Electro Cam Corp.

13647 METRIC RD
ROSCOE IL, USA 61073
815 / 389-2620

SCALE: FULL	APPROVED BY / DATE:	DRAWN BY: DEW	
DATE: 6/18/98		FILE NAME: NETFWRD.DWG	

PS-2252-12-TP1 ENCODER INTERFACE

DWG. #: B-1998-006-001

ITEM #: 100-8600-004